Giza Steel
1801 Park 270 Drive Suite 220 St. Louis, MO 63146
Email: info@gizasteel.com
www.gizasteel.com

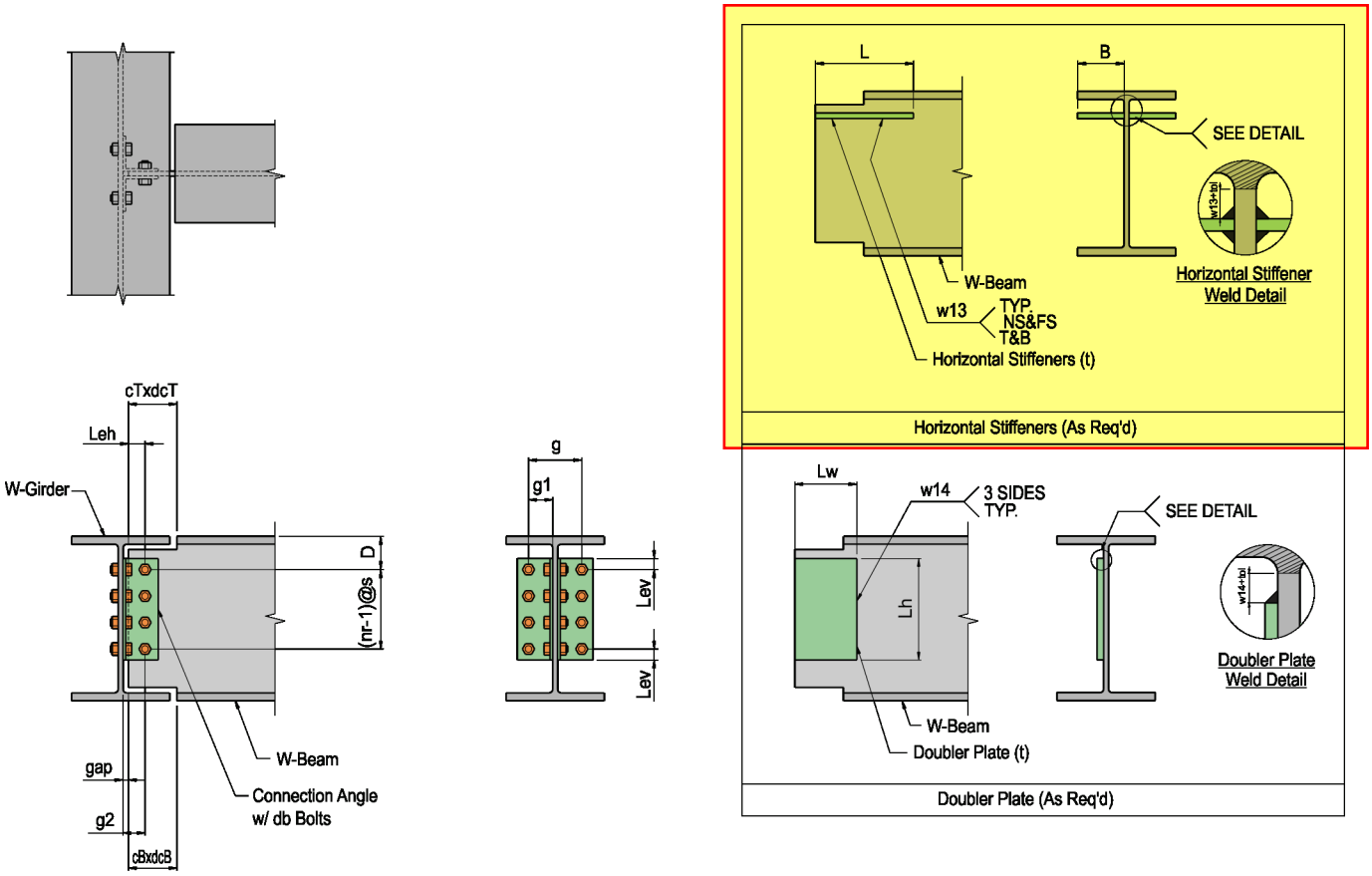

Note: Figure above does not present actual design. Refer to connection schedule.

SHEAR CONNECTION: W BEAM WITH DOUBLE ANGLE (BOLTED/BOLTED)

ONE-WAY SHEAR CONNECTION TO W GIRDER WEB

Giza Steel
1801 Park 270 Drive Suite 220 St. Louis, MO 63146
Email: info@gizasteel.com
www.gizasteel.com

I. DESIGN DATA AND LOADS (ASD-14th Edition)

GIRDER PROPERTIES: **W12X40 - A992**

Depth,	d = 11.9 in	*Web Thickness,*	tw = 0.295 in
Flange Width,	bf = 8.01 in	*Flange Thickness,*	tf = 0.515 in
Distance k,	k = 1.375 in	*Distance k1,*	k1 = 0.875 in
Area,	Ag = 11.7 in²	*Distance k (Design),*	kdes = 1.02 in
Minimum Yield Stress,	Fy = 50 ksi	*Minimum Tensile Stress,*	Fu = 65 ksi
Modulus of Elasticity,	E = 29000 ksi		
Top of Steel Elevation,	Elev = 9 ft + 10 in	*Gage,*	g = 5.25 in

BEAM PROPERTIES: **W16X26 - A992**

Depth,	d = 15.7 in	*Web Thickness,*	tw = 0.25 in
Flange Width,	bf = 5.5 in	*Flange Thickness,*	tf = 0.345 in
Distance k,	k = 1.063 in	*Distance k1,*	k1 = 0.75 in
Area,	Ag = 7.68 in²	*Distance k(Design),*	kdes = 0.747 in
Minimum Yield Stress,	Fy = 50 ksi	*Minimum Tensile Stress,*	Fu = 65 ksi
Modulus of Elasticity,	E = 29000 ksi		
Top of Steel Elevation,	Elev = 10 ft + 0 in		
Span Length,	L = 15 ft	*Erection Clearance,*	gap = 0.5 in
Slope,	θsl = 0 deg	*Skew,*	θsk = 0 deg
Depth of Top Cope,	dcT = 3 in	*Depth of Bottom Cope,*	dcB = 2.75 in
Length of Top Cope,	cT = 4 in	*Length of Bottom Cope,*	cB = 4 in

CONNECTION ANGLE PROPERTIES: **2L4X3-1/2X5/16 SLBB - A36**

Girder Side Leg Size,	leg1 = 4 in	*Thickness,*	t = 0.313 in
Beam Side Leg Size,	leg2 = 3.5 in	*Number of Connection Angles,*	n = 2
Minimum Yield Stress,	Fy = 36 ksi	*Modulus of Elasticity,*	E = 29000 ksi

Minimum Tensile Stress,	Fu = 58 ksi		
Girder Side Bolt Gage,	g1 = 2.5 in	*Beam Side Bolt Gage,*	g2 = 2.25 in

HORIZONTAL STIFFENER PLATE PROPERTIES: **A572-50**

Thickness,	t = 0.375 in	*Number of Plates,*	n = 2
Width,	b = 2.625 in	*Length,*	L = 10.5 in
Minimum Yield Stress,	Fy = 50 ksi	*Minimum Tensile Stress,*	Fu = 65 ksi
Modulus of Elasticity,	E = 29000 ksi		

BOLTS PROPERTIES: **3/4" - ø - A325-N**

For Connection Angle to Beam Web Connection:

Bolt Diameter,	db = 0.75 in		
Bolt Shear Strength,	Arv = 11.928 kips	*Bolt Tensile Strength,*	Arn = 19.88 kips
Bolt Type,	Bolt_Type = A325-N	*Connection Type,*	Conn_type = Bearing Type
Number of Bolt Rows,	nr = 3	*Bolt Vertical Spacing,*	s = 3 in
Number of Bolt Column Lines,	nv = 1	*Bolt Horizontal Spacing,*	sv = 0 in
Total Number of Bolts (nr·nv),	nb = 3		
Holes at Beam Web,		*Holes at Connection Angle,*	
Vertical Hole Dimension,	hdv = 0.875 in	*Vertical Hole Dimension,*	hdv = 0.875 in
Horizontal Hole Dimension,	hdh = 0.875 in	*Horizontal Hole Dimension,*	hdh = 0.875 in
Bolt First Down from Top of Beam,	D = 5.438 in		
Vertical Edge Distance(D-dcT),	Lev = 2.438 in	*Vertical Edge Distance,*	Lev = 1.25 in
Horizontal Edge Distance,	Leh = 1.75 in	*Horizontal Edge Distance (leg2-g2-(nv-1)·(sv)),*	Leh = 1.25 in

BOLTS PROPERTIES: **3/4" - ø - A325-N**

For Connection Angle to Girder Web Connection:

Bolt Diameter, db = 0.75 in

Bolt Shear Strength, Λrv = 11.928 kips

Bolt Tensile Strength, Λrn = 19.88 kips

Bolt Type, Bolt_Type = A325-N

Connection Type, Conn_type = Bearing Type

Number of Bolt Rows, nr = 3

Bolt Vertical Spacing, s = 3 in

Number of Bolt Column Lines, nv = 1

Bolt Horizontal Spacing, sv = 0 in

Total Number of Bolts (nr·nv), nb = 3

Adjacent Number of Bolt Rows (if any), nr2 = 0

Holes at Girder Web,

Vertical Hole Dimension, hdv = 0.875 in

Horizontal Hole Dimension, hdh = 0.875 in

Bolt First Down from Top of Beam, D = 5.438 in

Holes at Connection Angle,

Vertical Hole Dimension, hdv = 0.875 in

Horizontal Hole Dimension, hdh = 1.063 in

Vertical Edge Distance, Lev = 1.25 in

Horizontal Edge Distance (leg1-g1-(nv-1)·(sv)), Leh = 1.5 in

WELDS PROPERTIES: **E70xx** **LH**

Minimum Tensile Stress, Fu = 70 ksi

For Horizontal Stiffener Plate to Beam Web Connection (As Req'd):

Prefered Weld Size (w13), w = 0.25 in

SAFETY AND RESISTANCE FACTORS:

Safety Factor, Ω(ASD)

Resistance Factor, ϕ(LRFD)

Modification Factor,

$\Lambda = \frac{1}{\Omega}$ *(if ASD)*

$\Lambda = \phi$ *(if LRFD)*

safety factor *resistance factor* *modification factor*

For Member in Bearing/Bolt Bearing(brg),	$\Omega brg = 2.00$	$\phi brg = 0.75$	$\Lambda brg = 0.50$
For Block Shear(bs),	$\Omega bs = 2.00$	$\phi bs = 0.75$	$\Lambda bs = 0.50$
For Fillet Weld Shear(vw),	$\Omega vw = 2.00$	$\phi vw = 0.75$	$\Lambda vw = 0.50$
For Flexural Local Buckling/Flexural Strength(b),	$\Omega b = 1.67$	$\phi b = 0.90$	$\Lambda b = 0.60$
For Flexural Rupture(fr),	$\Omega fr = 2.00$	$\phi fr = 0.75$	$\Lambda fr = 0.50$
For Member Shear for C, WT, L(v),	$\Omega v = 1.67$	$\phi v = 0.90$	$\Lambda v = 0.60$
For Shear Rupture(vr),	$\Omega vr = 2.00$	$\phi vr = 0.75$	$\Lambda vr = 0.50$
For Shear Yielding(vy),	$\Omega vy = 1.50$	$\phi vy = 1.00$	$\Lambda vy = 0.67$

APPLIED LOADS:

Beam:

50% Uniform Distributed Load

Shear Load, $V = 29.5$ kips

Adjacent Shear Load (if any), $V_2 = 0$ kips

II. CALCULATIONS

A. BEAM WEB CHECK

1. Bolt Capacity

(AISC 14th Ed. Specifications, Chapter J, Section J3.10, pages 16.1-127 to 16.1-128)

a. Bolt Capacity due to Shear Load

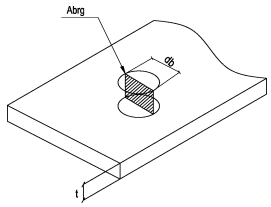

Bearing Area,

$Abrg = db \cdot tw$ $\qquad Abrg = 0.187\ in^2$

Bolt Centerline Distance from Face of Support,

$ab = g2 + 0.5 \cdot (nv - 1) \cdot sv$ $\qquad ab = 2.25\ in$

Eccentricity Distance of End Reaction from Bolt Line,

$ab \le 3.0in \wedge nv = 1$

$ebv = 0\ in$ $\qquad ebv = 0\ in$

Load Inclination from Vertical,

$\theta = 0\ deg$

Eccentric Load Coefficient,

(AISC 14th Ed. Manual Part 7, Instantaneous Center of Rotation Method, pages 7-6 to 7-8)

$C = 3$

Allowable Bearing Strength Using Edge Distance, (J3-6a, J3-6c)

$hdh < hdls$

$$Fbe = \Lambda brg \cdot Fu \cdot \begin{bmatrix} 1.2 \cdot (Lev - 0.5 \cdot hdv) \cdot tw \\ 1.2 \cdot (Leh - 0.5 \cdot hdh) \cdot tw \\ 2.4 \cdot Abrg \end{bmatrix}$$

$ebv \le 0in$

$Fbe = \min(Fbe_0, Fbe_2)$ $\qquad Fbe = 14.625\ kips$

Allowable Bearing Strength Using Bolt Spacing, (J3-6a, J3-6c)

$hdh < hdls$

$Fbs = \Lambda brg \cdot Fu \cdot \min[1.2 \cdot (s - hdv) \cdot tw, 2.4 \cdot Abrg]$

$Fbs = 14.625\ kips$

Number of Areas in Consideration,

$n1 = 1$

Connection Angle,

$n2 = n$

Bolt Capacity,

$ebv \le 0in$

$Rbrg = nv \cdot [\min(n1 \cdot Fbe, n2 \cdot \Lambda rv) + \min(n1 \cdot Fbs, n2 \cdot \Lambda rv) \cdot (nr - 1)]$

$Rbrg = 43.875$ kips $\qquad V = 29.5$ kips

Bolt Capacity > Applied Force, UCV = 0.672, OK

2. Coped Beam Capacity

a. Capacity if Beam Web is Double Coped with Same Cope length at Both Flanges (AISC 14th Ed. Manual Part 9, page 9-8)

Depth of Cope,

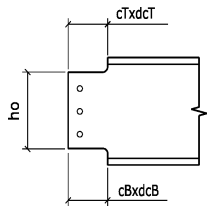

Top Cope,

$dcT = 3$ in

Bottom Cope,

$dcB = 2.75$ in

Maximum Cope,

$dc = \max(dcT, dcB) \qquad dc = 3$ in

depth of cope < 0.2 of depth of beam, OK

Length of Cope,

Top Cope,

$cT = 4$ in

Bottom Cope,

$cB = 4$ in

Maximum Cope,

$c = \max(cT, cB) \qquad c = 4$ in

length of cope < twice the depth of beam, OK

Reduced Beam Depth,

$ho = d - dcT - dcB$

$ho = 9.95$ in

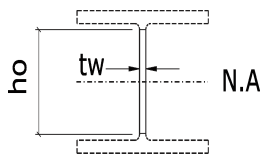

Adjustment Factor of Lateral-Torsional Buckling Model,

$$fd = 3.5 - 7.5\left(\frac{dcT}{d}\right) \qquad fd = 2.067$$

Allowable Flexural Local Buckling Stress or Yielding Stress,

$$Fcr = \min\left(0.62 \cdot \pi \cdot E \cdot fd \cdot \frac{tw^2}{c \cdot ho}, Fy\right) \qquad Fcr = 50 \text{ ksi}$$

Net Section Modulus,

$$Snet = \frac{tw \cdot ho^2}{6} \qquad Snet = 4.125 \text{ in}^3$$

Eccentricity,

$e = c + gap$ $\qquad e = 4.5\ in$

Flexural Local Buckling Capacity or Yielding Capacity,

$Rbc = \Lambda b \cdot \frac{Fcr \cdot Snet}{e}$ $\qquad Rbc = 27.446\ kips$

Flexural Rupture Capacity,

$Rfr = \Lambda fr \cdot \frac{Fu \cdot Snet}{e}$ $\qquad Rfr = 29.792\ kips$

Shear Capacity of Reduced Section,

$Vwg = \Lambda vy \cdot 0.6 \cdot Fy \cdot ho \cdot tw$ $\qquad Vwg = 49.75\ kips$

Coped Beam Capacity,

$Rcb = \min(Rbc, Rfr, Vwg)$

$Rcb = 27.446\ kips$ $\qquad V = 29.5\ kips$

Please refer to Design of Coped Beam with Reinforcement, OK

3. Coped Beam Capacity with Horizontal Stiffener Plate

Allowable Flexural Local Buckling Stress/Yielding Stress,

$Fcr = 50\ ksi$

Location of Neutral Axis on the Reduced Section,

$xb = 6.952\ in$

$xt = 2.998\ in$

Moment of Inertia,

$I = 42.553\ in^4$

Slenderness of Horizontal Stiffener Plate,

Net Section Modulus at Compression Area,

$SxC = \frac{I}{xt}$ $\qquad SxC = 14.194\ in^3$

Net Section Modulus at Tension Area,

$SxT = \frac{I}{xb}$ $\qquad SxT = 6.121\ in^3$

Flexural Yield Stress, (Table B4.1b)

$\frac{SxT}{SxC} < 0.7$

$FL = \frac{SxT}{SxC} Fy1$ $\qquad FL = 21.562\ ksi$

Clear Distance Between Flanges of Beam Less the Fillet or Corner Radii,

$h = ho$ $\qquad h = 9.95\ in$

Web Plate Buckling Coefficient,

$$\frac{4}{\left(\frac{h}{tw}\right)^{0.5}} > 0.35$$

$$kc = \min\left[0.76, \frac{4}{\left(\frac{h}{tw}\right)^{0.5}}\right] \qquad kc = 0.634$$

Limiting Slenderness Parameter for Noncompact Element,

$$\lambda r = 0.95\left(\frac{kc \cdot E}{FL}\right) \qquad \lambda r = 27.742$$

Width-to-thickness Ratio,

$$\frac{bst}{2tst} \le \lambda r$$

$$\frac{bst}{2tst} = 3.5 \qquad \lambda r = 27.742$$

Stiffener Plate is not slender

Net Section Modulus,

$$Snet = \frac{I}{\max(xb, xt)} \qquad Snet = 6.121\ in^3$$

Eccentricity,

$$e = c + gap \qquad e = 4.5\ in$$

Flexural Local Buckling Capacity or Yielding Capacity

$$Rbc = \lambda b \cdot \frac{Fcr \cdot Snet}{e} \qquad Rbc = 40.725\ kips$$

Flexural Rupture Capacity,

$$Rfr = \lambda fr \cdot \frac{Fu \cdot Snet}{e} \qquad Rfr = 44.207\ kips$$

Shear Capacity of Reduced Section,

$$Vwg = \lambda vy \cdot 0.6 \cdot Fy \cdot ho \cdot tw \qquad Vwg = 49.75\ kips$$

Coped Beam Capacity,

$$Rcb = \min(Rbc, Rfr, Vwg)$$

$$Rcb = 40.725\ kips \qquad V = 29.5\ kips$$

Flexural Cope Buckling Capacity > Applied Force, UCV = 0.724, OK

4. Weld Capacity of Horizontal Stiffener Plate to Beam Web

(AISC 14th Ed. Specifications, Chapter J, pages 16.1-110 to 16.1-117)

(AISC 14th Ed. Manual, Part 8, pages 8-9 to 8-15)

Number of Weld Sides,

$$nws = 4$$

Minimum Weld Size,

wmin = 0.125 in w = 0.25 in

Preferred Weld Size > Minimum Weld Size, OK

Length of Horizontal Stiffener Plate,

L = 7 in

Force Acting on the Connection,

Ruw = 23.865 kips

Shear Strength,

For Beam Web,

Rv1 = Λvr·0.6·Fu·tw Rv1 = 9.75 kips/in

For Horizontal Stiffener Plate,

Rv2 = Λvr·0.6·Fu·t Rv2 = 14.625 kips/in

For Weld,

Rv3 = Λvw·0.6·Fu·sin(45deg)·nws Rv3 = 59.397 ksi

Maximum Effective Weld Size,

$$weff = \frac{\min(Rv1, Rv2)}{Rv3}$$ weff = 0.164 in

Length of Weld,

Lw = L Lw = 7 in

Weld Capacity,

Rw = Λvw·0.6·Fu·sin(45deg)·nws·Lw·min(w,weff)

Rw = 68.25 kips Ruw = 23.865 kips

Weld Capacity > Applied Force, UCV = 0.35, OK

5. Shear Capacity

(AISC 14th Ed. Specifications, Chapter G, Section G2.1, pages 16.1-67 to 16.1-69)

Clear Distance Between Flanges of Beam Less the Fillet or Corner Radii,

h = d - 2·kdes h = 14.206 in

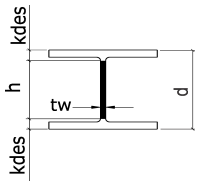

Limiting Depth-thickness Ratio,

$$htw = \frac{h}{tw}$$ htw = 56.824

Clear Distance Between Transverse Stiffeners,

htw < 260

a = 0 in a = 0 in

Web Plate Buckling Coefficient, (G2-6)

htw < 260

kv = 5 kv = 5

Web Shear Coefficient, (G2-3, G2-4, G2-5)

$$htw \le 1.1 \cdot \left(\frac{kv \cdot E}{Fy}\right)^{0.5}$$

Cv = 1 Cv = 1

Shear Capacity, (G2-1)

$Rv = \Lambda vbm \cdot 0.6 \cdot Fy \cdot d \cdot tw \cdot Cv$

Rv = 70.509 kips V = 29.5 kips

Shear Capacity of Section > Applied Force, UCV = 0.418, OK

B. BEAM WEB TO CONNECTION ANGLE CHECK

1. Bolt Shear Capacity

(AISC 14th Ed. Specifications, Chapter J, Section J3.6, pages 16.1-125)

Shear Capacity Per Bolt,

$\Lambda rv = 11.928$ kips

Bolt Shear Capacity,

$Rb = n \cdot nb \cdot \Lambda rv$

Rb = 71.569 kips V = 29.5 kips

Bolt Shear Capacity > Applied Force, UCV = 0.412, OK

2.Check for Spacing

(AISC 14th Ed. Specifications Chapter J, Section J3.3 and J3.5, pages 16.1-122 to 16.1-124)

Connection Angle Thickness,

t1 = 0.313 in

Beam Web Thickness,

t2 = 0.25 in

Vertical Spacing of Bolts,

s = 3 in

$$smin = 2\frac{2}{3} \cdot db$$ smin = 2 in

smax = min(12in, 24·min (t1, t2)) smax = 6 in

Spacing > Min. Spacing & Spacing < Max. Spacing, OK

3. Check for Edge Distance

(AISC 14th Ed. Specifications, Chapter J, Section J3.4 and J3.5, pages 16.1-122 to 16.1-124)

Connection Angle Thickness,

$t1 = 0.313\ in$

Connection Angle Edge Distances,

$Lev1 = 1.25\ in$

$Leh1 = 1.25\ in$

Beam Web Thickness,

$t2 = 0.25\ in$

Beam Web Edge Distances,

$Lev2 = 2.438\ in$

$Leh2 = NA$

Vertical Edge Distance,

$Levcon = \begin{pmatrix} Lev1 \\ Lev2 \end{pmatrix}$ $\quad Levcon = \begin{pmatrix} 1.25\ in \\ 2.438\ in \end{pmatrix}$

$Levmin = \begin{pmatrix} Levmin1 \\ Levmin2 \end{pmatrix}$ $\quad Levmin = \begin{pmatrix} 1\ in \\ 1\ in \end{pmatrix}$

$\min(Levcon) = Lev1$

$Levmax = \min(6in, 12 \cdot t1)$

$Levmax = 3.756\ in$

Edge Distance ≥ Min. Edge Distance & Edge Distance ≤ Max. Edge Distance, OK

Horizontal Edge Distance,

$Lehcon = \begin{pmatrix} Leh1 \\ Leh2 \end{pmatrix}$ $\quad Lehcon = \begin{pmatrix} 1.25\ in \\ NA \end{pmatrix}$

$Lehmin = \begin{pmatrix} Lehmin1 \\ Lehmin2 \end{pmatrix}$ $\quad Lehmin = \begin{pmatrix} 1\ in \\ NA \end{pmatrix}$

$\min(Lehcon) = Leh1$

$Lehmax = \min(6in, 12 \cdot t1)$

$Lehmax = 3.756\ in$

Edge Distance ≥ Min. Edge Distance & Edge Distance ≤ Max. Edge Distance, OK

C. CONNECTION ANGLE CHECK

1. Bolt Capacity

(AISC 14th Ed. Specifications, Chapter J, Section J3.10, pages 16.1-127 to 16.1-128)

a. Bolt Capacity due to Shear Load (Secondary Side)

Bearing Area,

$Abrg = db \cdot t$ $\quad Abrg = 0.235\ in^2$

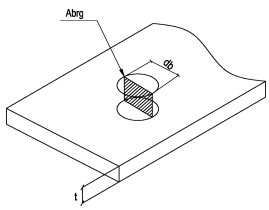

Bolt Centerline Distance from Face of Support,

$ab = g2 + 0.5 \cdot (nv - 1) \cdot sv$ $\quad ab = 2.25\ in$

Eccentricity Distance of End Reaction from Bolt Line,

$ab \le 3.0in \wedge nv = 1$

$ebv = 0\ in$ $\qquad ebv = 0\ in$

Load Inclination from Vertical,

$\theta = 0\ deg$

Eccentric Load Coefficient,

(AISC 14th Ed. Manual Part 7, Instantaneous Center of Rotation Method, pages 7-6 to 7-8)

$C = 3$

Allowable Bearing Strength Using Edge Distance, (J3-6a, J3-6c)

$hdh < hdls$

$$Fbe = \Lambda brg \cdot Fu \cdot \begin{bmatrix} 1.2 \cdot (Lev - 0.5 \cdot hdv) \cdot t \\ 1.2 \cdot (Leh - 0.5 \cdot hdh) \cdot t \\ 2.4 \cdot Abrg \end{bmatrix}$$

$ebv \le 0in$

$Fbe = \min(Fbe_0, Fbe_2)$ $\qquad Fbe = 8.85\ kips$

Allowable Bearing Strength Using Bolt Spacing, (J3-6a, J3-6c)

$hdh < hdls$

$Fbs = \Lambda brg \cdot Fu \cdot \min[1.2 \cdot (s - hdv) \cdot t, 2.4 \cdot Abrg]$

$Fbs = 16.339\ kips$

Number of Areas in Consideration,

$n1 = n$

Connection Angle,

$n2 = n$

Bolt Capacity,

$ebv \le 0in$

$Rbrg1 = nv \cdot [\min(n1 \cdot Fbe, n2 \cdot \Lambda rv) + \min(n1 \cdot Fbs, n2 \cdot \Lambda rv) \cdot (nr - 1)]$

$Rbrg1 = 65.413\ kips$ $\qquad V = 29.5\ kips$

Bolt Capacity > Applied Force, UCV = 0.451, OK

b. *Bolt Capacity due to Shear Load (Primary Side)*

Bearing Area,

$Abrg = db \cdot t$ $\qquad Abrg = 0.235\ in^2$

Allowable Bearing Strength Using Edge Distance,(J3-6a,J3-6c)

$hdh < hdls$

$Fbe = \Lambda brg \cdot Fu \cdot \min[1.2 \cdot (Lev - 0.5 \cdot hdv) \cdot t, 2.4 \cdot Abrg]$

$Fbe = 8.85\ kips$

Allowable Bearing Strength Using Bolt Spacing,(J3-6a,J3-6c)

hdh < hdls

Fbs = Λbrg·Fu·min[1.2·(s - hdv)·t,2.4·Abrg]

Fbs = 16.339 kips

Number of Areas in Consideration,

n1 = n

Connection Angle,

n2 = n

Bolt Capacity,

Rbrg2 = nv·[min(n1·Fbe,n2·Λrv) + min(n1·Fbs ,n2·Λrv)·(nr - 1)]

Rbrg2 = 65.413 kips V = 29.5 kips

Bolt Capacity > Applied Force, UCV = 0.451, OK

Governing Bolt Capacity,

Rbrg = min(Rbrg1, Rbrg2)

Rbrg = 65.413 kips V = 29.5 kips

Bolt Capacity > Applied Force, UCV = 0.451, OK

2. Yielding Capacity

(AISC 14th Ed. Specifications, Chapter J, Section J4.2, page 16.1-129)

a. Shear Yielding Capacity due to Shear Load

Length,

L = (nr - 1)·s + 2·Lev L = 8.5 in

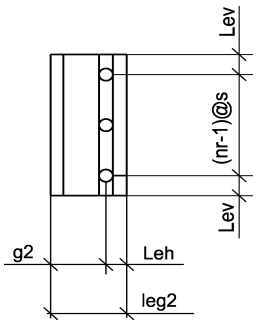

Erection Stability,

(AISC 14th Ed. Manual, Part 10, page 10-9)

Length of Connector > One-half of T-Dimension, OK

Number of Areas in Consideration,

n1 = n

Shear Yielding Capacity, (J4-3)

Rvy = Λvy·n1·0.6·Fy·L·t

Rvy = 76.622 kips V = 29.5 kips

Shear Yielding Capacity > Applied Force, UCV = 0.385, OK

3. Rupture Capacity

(AISC 14th Ed. Specifications Chapter J, Section J4.2, page 16.1-129)

a. Shear Rupture Capacity due to Shear Load(Secondary Side)

Net Shear Area,

Anv = (L - nr·hdv)·t Anv = 1.839 in²

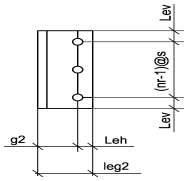

Number of Areas in Consideration,

n1 = n

Shear Rupture Capacity, (J4-4)

Rvr1 = Λvr·n1·0.6·Fu·Anv

Rvr1 = 63.993 kips V = 29.5 kips

Shear Rupture Capacity > Applied Force, UCV = 0.461, OK

b. Shear Rupture Capacity due to Shear Load (Primary Side)

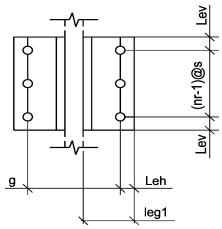

Net Shear Area,

Anv = (L - nr·hdv)·t Anv = 1.839 in²

Number of Areas in Consideration,

n1 = n

Shear Rupture Capacity, (J4-4)

Rvr2 = Λvr·n1·0.6·Fu·Anv

Rvr2 = 63.993 kips V = 29.5 kips

Shear Rupture Capacity > Applied Force, UCV = 0.461, OK

Governing Shear Rupture Capacity,

Rvr = min(Rvr1, Rvr2)

Rvr = 63.993 kips V = 29.5 kips

Shear Rupture Capacity > Applied Force, UCV = 0.461, OK

4. Block Shear Capacity

(AISC 14th Ed. Specifications, Chapter J, Section J4.3, page 16.1-129)

a. Block Shear Capacity due to Shear Load (Secondary Side)

Reduction Factor,

nv = 1

Ubs = 1.0 *(tension stress is uniform)*

Gross Shear Area,

Agv = [(nr - 1·s+Lev]·t Agv = 2.269 in²

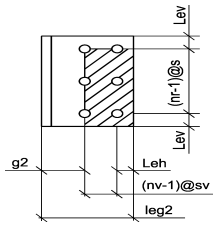

Net Tension Area,

Ant = [Leh + (nv - 1)·sv - (nv - 0.5)·hdh]·t

Ant = 0.254 in²

Net Shear Area,

Anv = Agv - [(nr - 0.5)·hdv]·t Anv = 1.585 in²

Number of Areas in Consideration,

n1 = n

Block Shear Capacity, (J4-5)

Rbs1 = Λbs·n1·min(0.6·Fu·Anv + Ubs·Fu·Ant, 0.6·Fy·Agv + Ubs·Fu·Ant)

Rbs1 = 63.766 kips V = 29.5 kips

Block Shear Capacity > Applied Force, UCV = 0.463, OK

b. Block Shear Capacity due to Shear Load (Primary Side)

Reduction Factor,

Ubs = 1.0 *(tension stress is uniform)*

Gross Shear Area,

Agv = [(nr - 1)·s + Lev]·t Agv = 2.269 in²

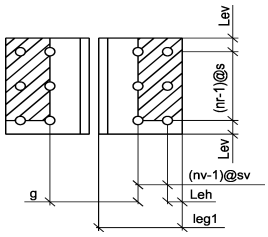

Net Tension Area,

Ant = [Leh + (nv - 1)·sv - (nv - 0.5)·hdh]·t

Ant = 0.303 in²

Net Shear Area,

Anv = Agv -[(nr - 0.5)·hdv]·t Anv = 1.585 in²

Number of Areas in Consideration,

n1 = n

Block Shear Capacity, (J4-5)

Rbs2 = Λbs·n1·min(0.6·Fu·Anv + Ubs·Fu·Ant, 0.6·Fy·Agv + Ubs·Fu·Ant)

Rbs2 = 66.602 kips V = 29.5 kips

Block Shear Capacity > Applied Force, UCV = 0.443, OK

Governing Block Shear Capacity,

Rbs = min(Rbs1, Rbs2)

Rbs = 63.766 kips V = 29.5 kips

Block Shear Capacity > Applied Force, UCV = 0.463, OK

D. CONNECTION ANGLE TO GIRDER WEB CHECK

1. Bolt Shear Capacity

(AISC 14th Ed. Specifications, Chapter J, Section J3.6, pages 16.1-125)

Shear Capacity Per Bolt,

Λrv = 11.928 kips

Bolt Shear Capacity,

Rb = n·nb·Λrv

Rb = 71.569 kips V = 29.5 kips

Bolt Shear Capacity > Applied Force, UCV = 0.412, OK

2. Check for Spacing

(AISC 14th Ed. Specifications Chapter J, Section J3.3 and J3.5, pages 16.1-122 to 16.1-124)

Connection Angle Thickness,

$t1 = 0.313\ in$

Girder Web Thickness,

$t2 = 0.295\ in$

Vertical Spacing of Bolts,

$s = 3\ in$

$smin = 2\frac{2}{3} \cdot db$ $\qquad smin = 2\ in$

$smax = \min(12in, 24 \cdot \min(t1, t2))$ $\qquad smax = 7.08\ in$

Spacing > Min. Spacing & Spacing < Max. Spacing, OK

3. Check for Edge Distance

(AISC 14th Ed. Specifications, Chapter J, Section J3.4 and J3.5, pages 16.1-122 to 16.1-124)

Connection Angle Thickness,

$t1 = 0.313\ in$

Connection Angle Edge Distances,

$Lev1 = 1.25\ in$

$Leh1 = 1.5\ in$

Vertical Edge Distance,

$Levcon = \begin{pmatrix} Lev1 \\ Lev2 \end{pmatrix}$ $\qquad Levcon = \begin{pmatrix} 1.25\ in \\ NA \end{pmatrix}$

$Levmin = \begin{pmatrix} Levmin1 \\ Levmin2 \end{pmatrix}$ $\qquad Levmin = \begin{pmatrix} 1\ in \\ NA \end{pmatrix}$

$\min(Levcon) = Lev1$

$Levmax = \min(6in, 12 \cdot t1)$

$Levmax = 3.756\ in$

Edge Distance ≥ Min. Edge Distance & Edge Distance ≤ Max. Edge Distance, OK

Horizontal Edge Distance,

$Lehcon = \begin{pmatrix} Leh1 \\ Leh2 \end{pmatrix}$ $\qquad Lehcon = \begin{pmatrix} 1.5\ in \\ NA \end{pmatrix}$

$Lehmin = \begin{pmatrix} Lehmin1 \\ Lehmin2 \end{pmatrix}$ $\qquad Lehmin = \begin{pmatrix} 1.125\ in \\ NA \end{pmatrix}$

$\min(Lehcon) = Leh1$

$Lehmax = \min(6in, 12 \cdot t1)$

$Lehmax = 3.756\ in$

Edge Distance ≥ Min. Edge Distance & Edge Distance ≤ Max. Edge Distance, OK

E. GIRDER WEB CHECK

1. Bolt Capacity

(AISC 14th Ed. Specifications, Chapter J, Section J3.10, pages 16.1-127 to 16.1-128)

Total Force Acting Per Bolt,

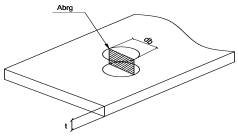

$V1 = \frac{V}{nr \cdot n}$ $\qquad V1 = 4.917$ kips

$nr2 = 0$

$V2 = 0$ kips $\qquad V2 = 0$ kips

$V12 = V1 + V2$ $\qquad V12 = 4.917$ kips

Effective Thickness of Web,

$tweff = tw \cdot \frac{V1}{V12}$ $\qquad tweff = 0.295$ in

Bearing Area,

$Abrg = db \cdot tweff$ $\qquad Abrg = 0.221$ in²

Allowable Bearing Strength Using Edge Distance, (J3-6a, J3-6c)

$hdh < hdls$

$Fbe = \Lambda brg \cdot Fu \cdot 2.4 \cdot Abrg$

$Fbe = 17.258$ kips

Allowable Bearing Strength Using Bolt Spacing, (J3-6a, J3-6c)

$hdh < hdls$

$Fbs = \Lambda brg \cdot Fu \cdot \min[1.2 \cdot (s - hdv) \cdot tweff , 2.4 \cdot Abrg]$

$Fbs = 17.258$ kips

Number of Areas in Consideration,

$n1 = n$

Connection Angle,

$n2 = n$

Bolt Capacity,

$Rbrg = nv \cdot [\min(n1 \cdot Fbe, n2 \cdot \Lambda rv) + \min(n1 \cdot Fbs, n2 \cdot \Lambda rv) \cdot (nr - 1)]$

$Rbrg = 71.569$ kips $\qquad V = 29.5$ kips

Bolt Capacity > Applied Force, UCV = 0.412, OK

III. DETAILS

A. SKETCH

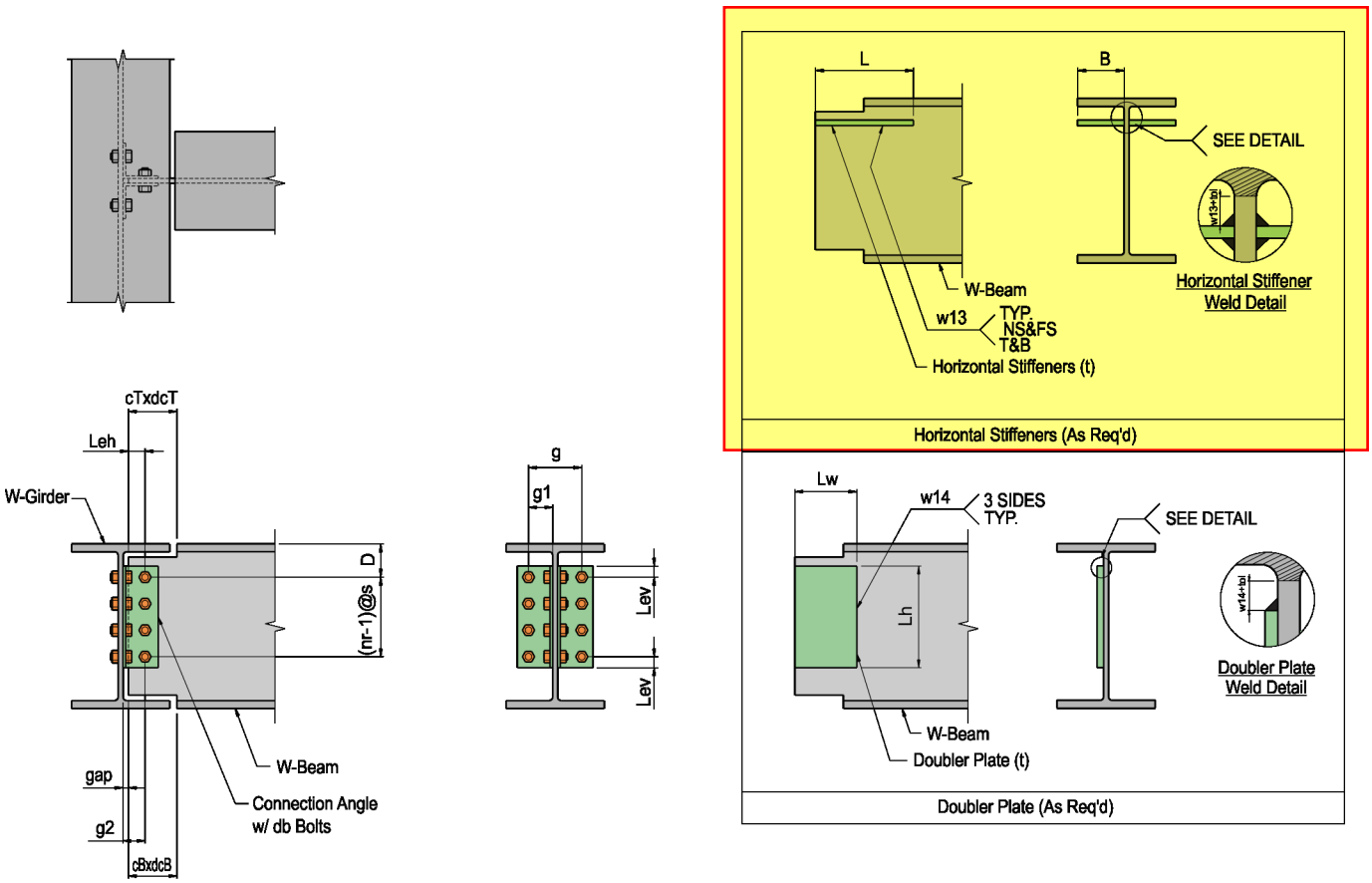

Note: Figure above does not present actual design. Refer to connection schedule.

SHEAR CONNECTION:W BEAM WITH DOUBLE ANGLE (BOLTED/BOLTED)

ONE-WAY SHEAR CONNECTION TO W GIRDER WEB

B. CONNECTION DETAILS

Girder			
Mark	**Size**	**Grade**	**g**
B10159	W12X40	A992	5 1/4"

Bolts at Girder Web						
db	**Bolt Type**	**Remarks**	**nr**	**s**	**nv**	**sv**
3/4"	A325-N	Short Slot on Outstanding Leg of Angle Only	3	3"	1	0"

Beam						Web	
Mark	**Size**	**Grade**	**gap**	**θsl**	**θsk**	**D**	**Leh**
B10146	W16X26	A992	1/2"	0°	0°	5 7/16"	1 3/4"

Cope Dimensions				
dcT	**cT**	**dcB**	**cB**	**Cut Flush Case**
3"	4"	2 3/4"	4"	NR

Bolts at Beam Web						
db	Bolt Type	Remarks	nr	s	nv	sv
3/4"	A325-N	Short Slot on Outstanding Leg of Angle Only	3	3"	1	0"

Connection Angle						
Size	Grade	Lev	g2	g1	leg2	leg1
2L4X3-1/2 X5/16 SLBB	A36	1 1/4"	2 1/4"	2 1/2"	3 1/2"	4"

Horizontal Stiffener Plate (As Req'd)					Weld (As Req'd)	Connection
t	n	Grade	b	L	w13	Remarks
3/8"	2	A572-50	2 5/8"	10 1/2"	1/4"	Horizontal Stiffener Plate is Required

Governing Limit State of SC Connection			
V	Connection Capacity	UCV	Governing Check
29.5 kips	40.725 kips	0.724	Flexural Cope Buckling Capacity of Beam

Remarks on Connection / Connecting Elements				
For Bolts	**For Connector Thickness**	**For Connector Length**	**For Bolt Spacing**	**For Edge Distance**
OK	OK	OK	OK	OK

Remarks on Beam Web / Girder Web	
For Beam Web	**For Girder Web**
OK	OK

IV. REFERENCES

Steel Construction Manual ,(14th Ed.), ASD, American Institute of Steel Construction, Inc. ,2011